Pocket for thermometers and thermostats with capillary tube

Technical Drawings

profile pocket ½" 15 x 16 mm

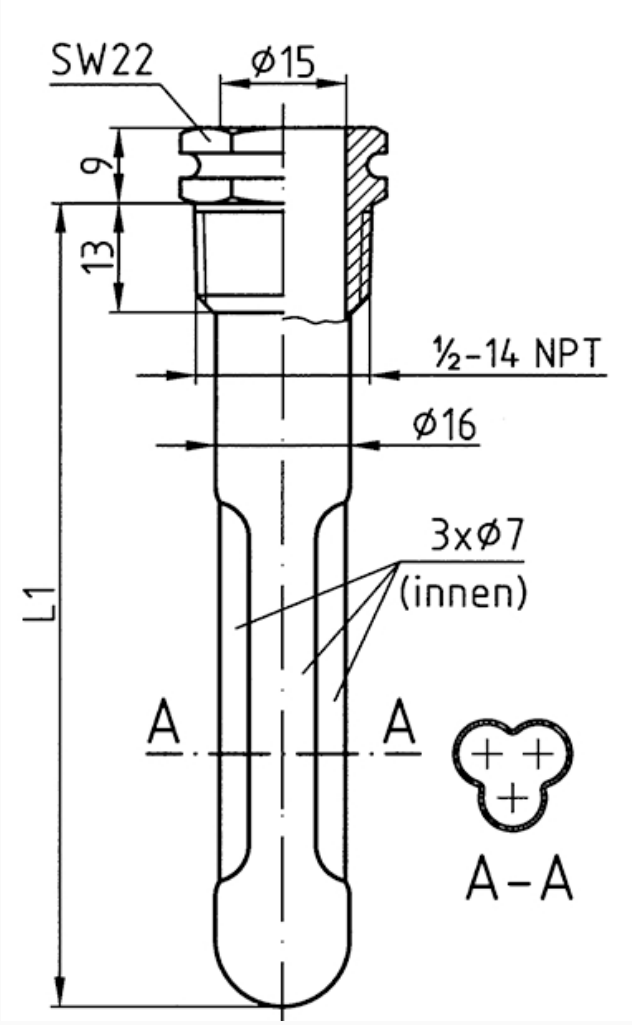

Dimensions (mm)

Versions

	Type	material	stem				Part no.
			inside ⌀	outside ⌀	Stem length L1		
	Profile pocket ½" 15 x 16 mm	Brass/Cu alloy, bare metal surface	15 mm	16 mm	100 mm	●	67335N
	Profile pocket ½" 15 x 16 mm	Brass/Cu alloy, bare metal surface	15 mm	16 mm	120 mm	○	67336N
	Profile pocket ½" 15 x 16 mm	Brass/Cu alloy, bare metal surface	15 mm	16 mm	150 mm	●	67337N
	Profile pocket ½" 15 x 16 mm	Brass/Cu alloy, bare metal surface	15 mm	16 mm	200 mm	●	67338N

● in-stock items

○ Non-stock items