Pocket for thermometers and thermostats with capillary tube

Technical Drawings

pocket ½" 7 x 8 mm

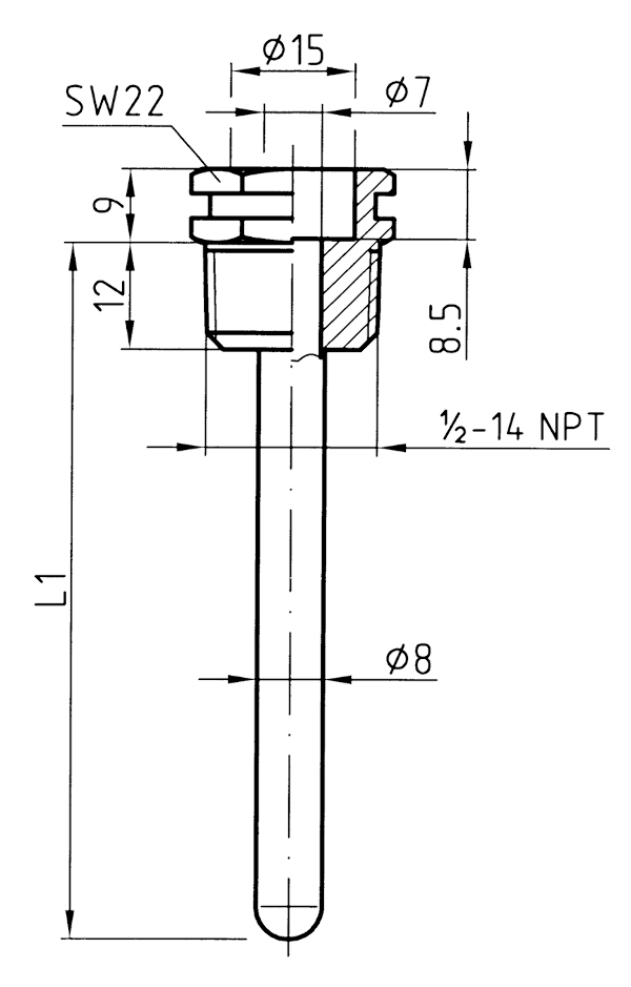

Dimensions (mm)

Versions

	Type	material	stem				Part no.
			inside ⌀	outside ⌀	Stem length L1		
	Pocket ½" 7 x 8 mm	Brass/Cu alloy, bare metal surface	7 mm	8 mm	50 mm	●	67320
	Pocket ½" 7 x 8 mm	Brass/Cu alloy, bare metal surface	7 mm	8 mm	100 mm	●	67321
	Pocket ½" 7 x 8 mm	Brass/Cu alloy, bare metal surface	7 mm	8 mm	120 mm	○	67322
	Pocket ½" 7 x 8 mm	Brass/Cu alloy, bare metal surface	7 mm	8 mm	150 mm	●	67323
	Pocket ½" 7 x 8 mm	Brass/Cu alloy, bare metal surface	7 mm	8 mm	200 mm	●	67324

● in-stock items

○ Non-stock items