Magnetite sludge separator

benefits

- Effective separation of particles by means of three filtration stages
- extends the service life of the system and ensures optimum system efficiency
- Easy operation and cleaning
- Flexible mounting vertical, horizontal or diagonal
- Optional EPP heat insulation

NEW

Application

For continuous removal of solid impurities from heating systems that can damage other system components (heat exchangers, condensers, valves, pumps, etc.). The sludge separator ensures clean water, reliable operation, better and faster heat transfer and thus contributes to reduced fuel consumption and emissions. Suitable for hot water heating systems, underfloor heating systems and other system equipment with water/glycol mixtures. Rust, lime particles, calcium, magnesium, oxides, carbonates and sludge as well as larger particles such as metal chips or construction residues are removed from the water – without the use of chemicals. Ideally, the unit is installed in the return line upstream of the heat generator.

Description

Compact sludge separator with drain valve and magnetite insert and optional form-fit heat insulation. When the system water flows into the separator, it starts to swirl. This causes a cyclonic movement of the medium, causing impurities to separate and settle in the lower part of ADS 160. There, metallic particles are attracted by a strong magnet. Other, non-metallic particles are removed by a 500 µm stainless steel sieve. The collected impurities can be easily removed via the drain valve. A manual vent is integrated in the cover; it can be replaced by an optional plastic G½ quick air vent. The mounting tool allows you to easily disassemble the sludge separator for thorough cleaning. Accessories include an additional stainless steel sieve with a greater mesh size, an anti-tamper seal to secure the magnet and spare O rings.

Technical Specifications

material
Housing: Plastic (PA66 with 30 % glass fibre)
Connection pieces: Brass
Filter sieve: Stainless steel

Operating pressure
at max. 50 °C: 6 bar
at max. 90 °C: 3 bar

Flow rate
max. 2.1 m³/h

Operating temperature range
Ambient: 0/90 °C

Capacity
400 ml

Connections
Vent: G½ female

Filter sieve
Mesh size: 500 µm (pre-assembled)
800 µm (accessories)

Magnet insert
Neodymium 1.4 T

Options

- other connection threads

Mounting position
Vertical, horizontal or diagonal

Scope of delivery
- Magnetite sludge separator with 500 µm filter sieve
- Filter sieve 800 µm
- mounting tools
- Seal
- 2 spare seals

Options
- other connection threads

Technical Drawings

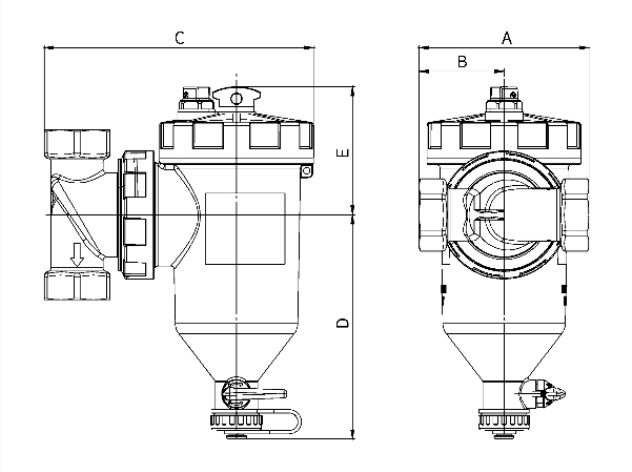

Größe	G¾	G1"	G1¼"
A	98	98	98
B	49	49	49
C	155,6	155,6	165
D	130	130	130
E	76	74	76

Versions

	Heat insulation	Connection		Part no.
Magnetite sludge separator ADS 160	0	G1 female	●	40920

● in-stock items

○ Non-stock items