Magnetite sludge separator

benefits

- effective separation of particles by means of magnet insert and filter sieve
- extends the service life of the system and ensures optimum system efficiency
- Easy operation and cleaning
- Ideal for large water volumes thanks to low pressure loss

NEW

Application

For continuous removal of solid impurities from heating systems that can damage other system components (heat exchangers, condensers, valves, pumps, etc.). The sludge separator ensures clean water, reliable operation, better and faster heat transfer and thus contributes to reduced fuel consumption and emissions. Suitable for hot water heating systems, underfloor heating systems and other system equipment with water/glycol mixtures. Rust, lime particles, calcium, magnesium, oxides, carbonates and sludge as well as larger particles such as metal chips or construction residues are removed from the water – without the use of chemicals. Ideally, the unit is installed in the return line upstream of the heat generator.

Description

Compact sludge separator with drain valve and magnetite insert. When the system water flows into the separator, metallic particles such as rust or metal chips are removed by a strong magnet. Other, non-metallic particles are removed by a 800 µm stainless steel sieve. Collected impurities can be removed quickly via the integrated drain valve. The upper part of the housing contains a connection thread G½ which is closed by a cap. This is provided for connection of an optional quick air vent. The mounting tool included in the scope of delivery allows you to easily disassemble the sludge separator for thorough cleaning.

Technical Specifications

material
Housing: Plastic (PA66 with 30 % glass fibre)
Connection pieces: Brass
Filter sieve: Stainless steel

Operating pressure
at max. 50 °C: 6 bar
at max. 90 °C: 3 bar

Flow rate
max. 9.6 m³/h

Operating temperature range
Ambient: 0/90 °C

Capacity
440 ml

Connections
Vent: G½ female

Filter sieve
Mesh size: 800 µm (pre-assembled)

Options

- other connection threads

Magnet insert
Neodymium 1.2 T

Mounting position
horizontal

Scope of delivery
- Magnetite sludge separator with 800 µm filter sieve
- mounting tools

Options
- other connection threads

Technical Drawings

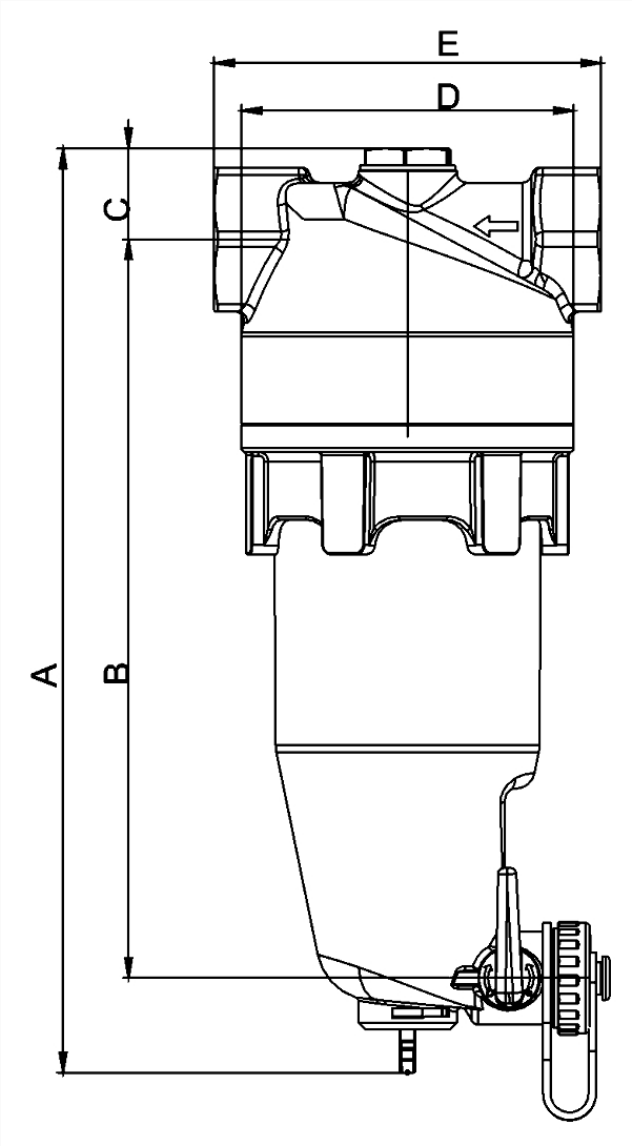

Größe	G1	G1¼
A	244	252
B	195	200
C	24	27,5
D	87,5	87,5
E	102	102

Versions

	Heat insulation	Connection		Part no.
Magnetite sludge separator ADS 180	0	G1 female	●	40921

● in-stock items

○ Non-stock items