Heat pump service combination

benefits

- Filling and flushing unit including hose connections
- Ideal for high system temperatures: Separation via filter with stainless steel sieve
- Integrated shut-off valves
- Large flow range

NEW

Application

For integration into closed heating systems and manifold systems, independent of the heat generator.

Description

As per VDI 2035, heating systems must be filled with treated heating circuit water. In addition, high-performance heat transfer media and/or frost protection agents are increasingly being used. Regardless of whether a new heating system is installed or an existing one upgraded, flushing the system is essential to remove contamination and ensure efficient operation. This requires a filling and flushing unit to be installed. For subsequent operation, the installation of a magnetite sludge separator is state of the art to ensure separation of contaminants such as magnetite on an ongoing basis. It is advisable to install shut-off elements to allow for easy cleaning the magnetite sludge separator. Practically all heat generators already feature electronic displays for the flow rate and system pressure. Nevertheless, a mechanical flow meter and a classic pressure gauge are helpful in monitoring the initial filling of the system and in checking the flow rate and system pressure during subsequent service work. Installing these components individually can lead to space problems. This often results in important fittings being installed in a poorly accessible location, which makes them difficult to operate later on. Installing, sealing and insulating the individual components requires a great deal of effort. A resulting additional pressure loss in the complete system can be avoided by using AHS.

Additional Informations

Function
The heat pump service combination combines all the functions of the individual components described in a compact unit and offers a practical solution covering the entire life cycle of the system:
During **installation or maintenance**, the combination can be used for flushing and filling of the system. The supplied hose connections are screwed on instead of the separator or filter.
During operation, the connections are used to accommodate the sludge separator or filter. Thanks to the integrated ball valves, both connections can be reliably closed for conversion, dismantling and cleaning. The flow meter provides information on the actual flow rate. An optional pressure gauge can be fitted from both sides, depending on the mounting position) to allow a **quick visual inspection**.

The form-fit thermal insulation pieces (accessories) optimally reduce heat losses and save time during installation.

Technical Specifications

material
Housing: Brass
seals: EPDM
Filter sieve: Stainless steel
Connection pieces: Brass

Operating pressure
max. 10 bar

Flow coefficient Kvs
6.5 m³/h

Operating temperature range
Medium: max. 120 °C (short-term 160 °C)

Dimensions
W x H x D: 124 x 235 x 51 mm

Connection
G1 female

Filter mesh size
500 µm

Mounting position
any

Mounting place
Preferably in return line to heat generator

Technical Drawings

AHS 500

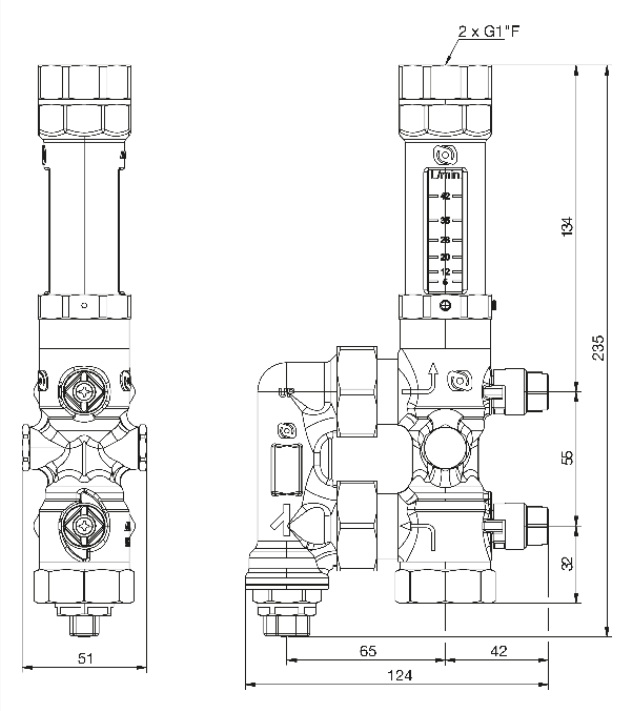

Dimensions (mm)

Versions

		Part no.
Heat pump service combination AHS 500	●	7750000

● in-stock items

○ Non-stock items