

Gas filled thermometers FTh 100 Ch

Part no. 64401402

gas filled thermometer for chemical applications

benefits

- for chemical, process engineering and food industry applications
- high measuring accuracy
- fast response

Application

For corrosive media. Meets the most exacting measuring demands, e.g. in process engineering as well as chemical and food industry applications.

Technical Specifications

Type
D4

Nominal size
100

Measuring principle
Pressurised gas filling

accuracy class
1 (EN 13190)

ranges °C
0/500

Application area (EN 13190)
continuous load: Full scale value
short-term: 1.1 x full scale value

Operating pressure at thermowell
max. 10 bar (Up to 300 °C)

Degree of protection
IP 65 (EN 60529)

standard version

Connection
Stem: Stainless steel 321, ∅ 10 mm, plain

mounting position
bottom

Dial
Aluminium, white
Scaling: black

Pointer
Aluminium, black

Zero correction
at the side

movement
Brass

Housing
Stainless steel 304

bayonet bezel
Stainless steel 304

window
Instrument glass

Options

- Every angle version
- Grooved nut connection as per DIN 11851
- other connection designs
- other nominal sizes
- other ranges
- special scales
- Glycerine filling (type D8)
- back flange
- 3-hole fixing, panel mounting bezel
- Capillary (stainless steel 321)
- special materials
- Electrical contacts

Technical Drawings

Bottom connection

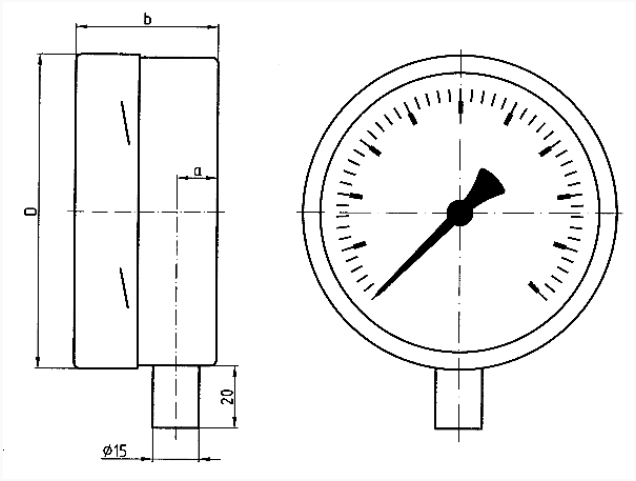

Dimensions (mm)

NG	a	b	D
100	13	45	101
160	13	45	161

Versions

	Type	housing ⌀	Range	Type	Type		Part no.
	FTh 100 Ch	100 mm	0/500 °C	FTh 100 Ch	D402	●	64401402

● in-stock items

● Non-stock items