# Zone valve AZV 642

**Part no. 81444**

**Zone valve AZV**

**benefits**

- Robust brass version
- Fully tight
- Intuitive position indicator using a coloured traffic light system
- low pressure loss, ideal for large water volumes
- Esay integration into heat pumps or hydraulic systems
- maintenance-free

NEW

## Application

For integration into heat pumps or hydraulic systems. AZV can be used, for example, to switch between the operating modes "heating" and "cooling" or "heating" and "service water heating" as well as for switching over in water storage tank applications and is also suitable for shutting off. Different housing versions allow the zone valve to be customised to suit the application and location. Suitable for water and water/glycol mixtures with up to 50 % glycol.

## Description

Zone valve consisting of valve unit and electrical drive. The proven, robust design results in complete tightness with low pressure loss. A position indicator with a coloured traffic light system intuitively signals the switching state of the valve. The direction of flow of the valve in the rest position can be changed while the valve is installed, without the necessity to open the water circuit. Manual emergency operation is possible by removing the electric motor and turning the integrated hand wheel.

## Technical Specifications

### Valve

**Material**
Housing: brass (CW617N)
seals: EPDM

**Connections**
see table

**Operating pressure**
max. 10 bar

**Differential pressure**
max. 2 bar

**Setting angle**
90 °

**Medium**
Heating circuit water or water/glycol mixture (glycol max. 50 %)

**Operating temperature range**
Medium: -20/+90 °C
Ambient: 0/75 °C

## Electrical drive

**Housing**
Material: plastic (PC/ABS)
Protection class: II
Degree of protection: IP 54 (EN 60529)

**Electrical connection**
AMP Superseal 1.5 Series 1745082-1

**Term**
15 seconds

**Power input**
< 7 W, in rest position 0 W

**Supply voltage**
AC 230 V, 50 Hz

**Nominal duty type**
S3 25 %

**Option**
- Actuator with other adjustment times
- Drive with more powerful motor/gear
- customised housing geometry
- other connections

## Options

- Actuator with other adjustment times
- Drive with more powerful motor/gear
- customised housing geometry
- other connections

## Technical Drawings

**Zone valve AZV / 2-way and 3-way**

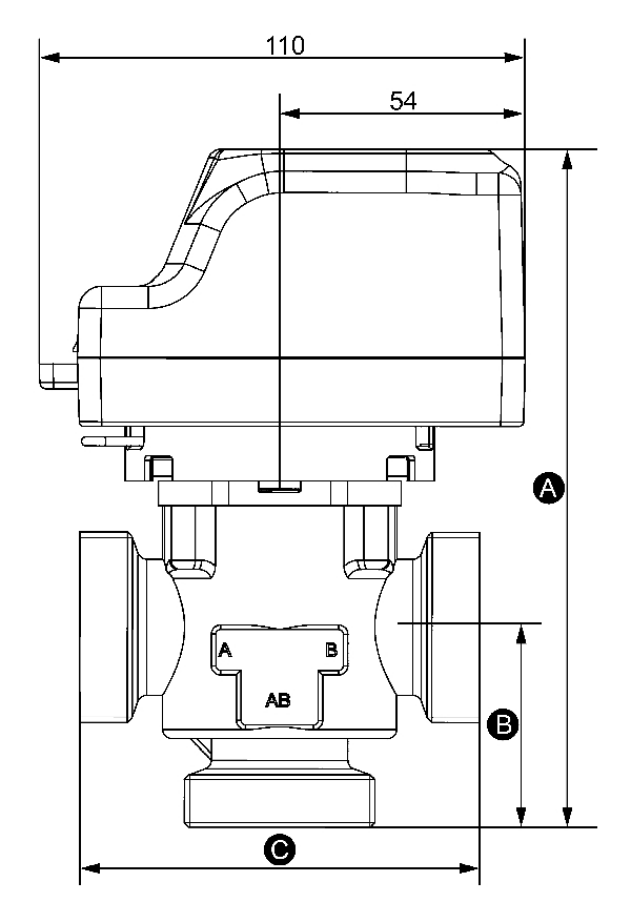


**Dimensions (mm)**

**Dimensions (mm)**

| Ventil-körper | A | B | C | D | E | Kvs | Ruhe-posi-tion |
|---|---|---|---|---|---|---|---|
| 2-W NC | 129 | 19 | 70 | 21,25 | G¾ AG | 10 | Ge-schlos-sen |
| 2-W NC | 129 | 19 | 70 | 21,25 | G1 AG | 10 | Ge-schlos-sen |
| 2-W NO | 129 | 19 | 70 | 21,25 | G¾ AG | 10 | Offen |
| 2-W NO | 129 | 19 | 70 | 21,25 | G1 AG | 10 | Offen |
| 3-W | 144 | 35 | 70 | 21,25 | G¾ AG | 8 | AB-B |
| 3-W | 144 | 35 | 70 | 21,25 | G1 AG | 8 | AB-B |
| 3-W | 156 | 44 | 88 | 25,75 | G1¼ AG | 11 | AB-B |
| 3-WE | 129 | 19 | 75 | 37,50 | G1 AG | 5,5 | AB-B |

## Versions

| | | | Part no. |
|---|---|---|---|
| Zone valve<br>AZV 642 | 3-W G¾ | ● | 81444 |

● in-stock items

○ Non-stock items