Zone valve AZV 442

Part no. 81440

Zone valve AZV

benefits

- Robust brass version
- Fully tight
- Intuitive position indicator using a coloured traffic light system
- low pressure loss, ideal for large water volumes
- Esay integration into heat pumps or hydraulic systems
- maintenance-free

NEW

Application

For integration into heat pumps or hydraulic systems. AZV can be used, for example, to switch between the operating modes "heating" and "cooling" or "heating" and "service water heating" as well as for switching over in water storage tank applications and is also suitable for shutting off. Different housing versions allow the zone valve to be customised to suit the application and location. Suitable for water and water/glycol mixtures with up to 50 % glycol.

Description

Zone valve consisting of valve unit and electrical drive. The proven, robust design results in complete tightness with low pressure loss. A position indicator with a coloured traffic light system intuitively signals the switching state of the valve. The direction of flow of the valve in the rest position can be changed while the valve is installed, without the necessity to open the water circuit. Manual emergency operation is possible by removing the electric motor and turning the integrated hand wheel.

Technical Specifications

Valve

Material
Housing: brass (CW617N)
seals: EPDM

Connections
see table

Operating pressure
max. 10 bar

Differential pressure
max. 2 bar

Setting angle
90 °

Medium
Heating circuit water or water/glycol mixture (glycol max. 50 %)

Operating temperature range
Medium: -20/+90 °C
Ambient: 0/75 °C

Electrical drive

Housing
Material: plastic (PC/ABS)
Protection class: II
Degree of protection: IP 54 (EN 60529)

Electrical connection
AMP Superseal 1.5 Series 1745082-1

Term
15 seconds

Power input
< 7 W, in rest position 0 W

Supply voltage
AC 230 V, 50 Hz

Nominal duty type
S3 25 %

Option
- Actuator with other adjustment times
- Drive with more powerful motor/gear
- customised housing geometry
- other connections

Options

- Actuator with other adjustment times
- Drive with more powerful motor/gear
- customised housing geometry
- other connections

Technical Drawings

Zone valve AZV / 2-way and 3-way

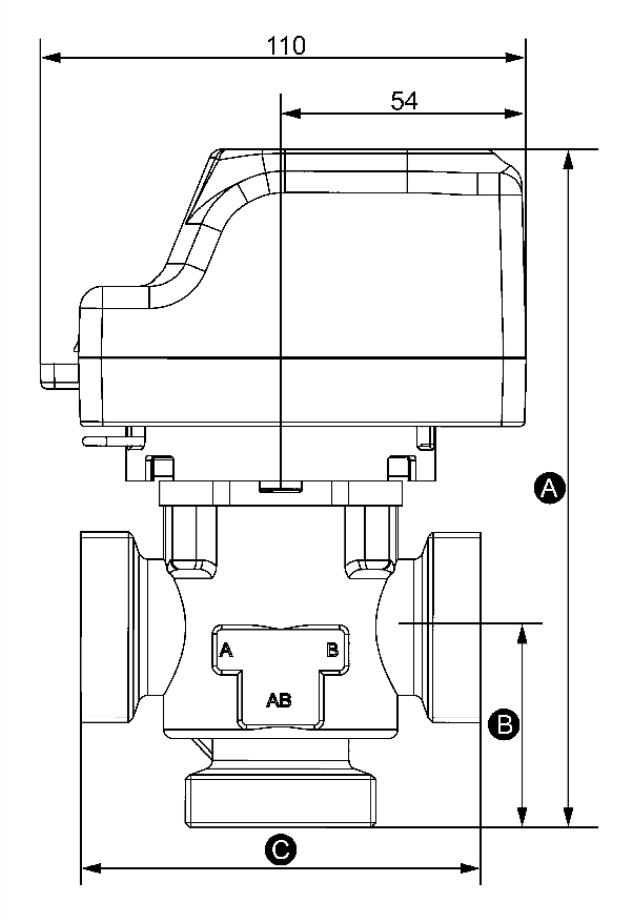

Dimensions (mm)

Dimensions (mm)

Ventil-körper	A	B	C	D	E	Kvs	Ruhe-posi-tion
2-W NC	129	19	70	21,25	G¾ AG	10	Ge-schlos-sen
2-W NC	129	19	70	21,25	G1 AG	10	Ge-schlos-sen
2-W NO	129	19	70	21,25	G¾ AG	10	Offen
2-W NO	129	19	70	21,25	G1 AG	10	Offen
3-W	144	35	70	21,25	G¾ AG	8	AB-B
3-W	144	35	70	21,25	G1 AG	8	AB-B
3-W	156	44	88	25,75	G1¼ AG	11	AB-B
3-WE	129	19	75	37,50	G1 AG	5,5	AB-B

Versions

			Part no.
Zone valve AZV 442	2-W G¾ NC	●	81440

● in-stock items

○ Non-stock items