charging unit RTA 60 DN25 WP

Part no. 77057

charging unit RTA 60 DN 25

benefits

- for storage tank charging with solid fuel boilers
- compact unit for limited space conditions
- with temperature-controlled condensation protection valve
- avoids deposits in the boiler and in the smoke vent
- ErP-ready: Electronics with increased energy efficiency reduces negative impact on the environment

NEW

Application

Charging unit for direct connection between a solid fuel boiler and a hot water storage tank. The compact design allows for mounting of RTA 60 to the pipes between the solid fuel boiler and the storage tank even if space is limited. Using the charging unit keeps the temperature in the heating boiler above the condensation point in all operating states. This avoids deposits in the boiler and in the smoke vent and increases the efficiency and the service life of the system. The risk of corrosion damage to the boiler and chimney fires resulting from soot deposits is reduced and the heat capacity of the boiler is stratified in the hot water storage tank. For the purpose, the 3-way mixer is controller via an ARM 343 actuator (connection to boiler control) or via an ACT 343 ProClick fixed setpoint controller (actuator not included in scope of delivery, please order separately). Since the flow coefficient Kvs is adjustable, the flow rate can be optimally adapted to the boiler capacity.

Description

Pre-assembled and tightness-tested assembly with 3-way mixer KVS Vario, storage tank charging unit and three ball valves with connection thread G1 female for system connection.
Heat insulation is provided by the customer.

Start mode = heating up of boiler
When the boiler heats up, the mixer is fully closed in the direction of the consumer. The liquid coming from the boiler is recirculated in the small circuit via the bypass, which causes the boiler temperature to increase more rapidly.

Mixing mode
When the adjusted return temperature is reached (e.g. 60 °C), the circuit to the consumer is opened proportionally and the bypass is reduced accordingly. However, the return temperature will not drop below the set temperature.

For technical information on suitable actuator and fixed setpoint controller see search: 77812
For technical information on suitable fixed setpoint controller see search: 77823

Please order actuator and fixed setpoint controller separately.

Technical Specifications

system connections
G1 female

Operating temperature range
Medium: max. 100 °C

System pressure
max. 6 bar

Nominal size
DN 25

System capacity
max. 60 kW at a flow rate of 2,600 l/h and a temperature spread of Δt 20 K

Circulation pump
Wilo Para 25-180/6-43

Technical Drawings

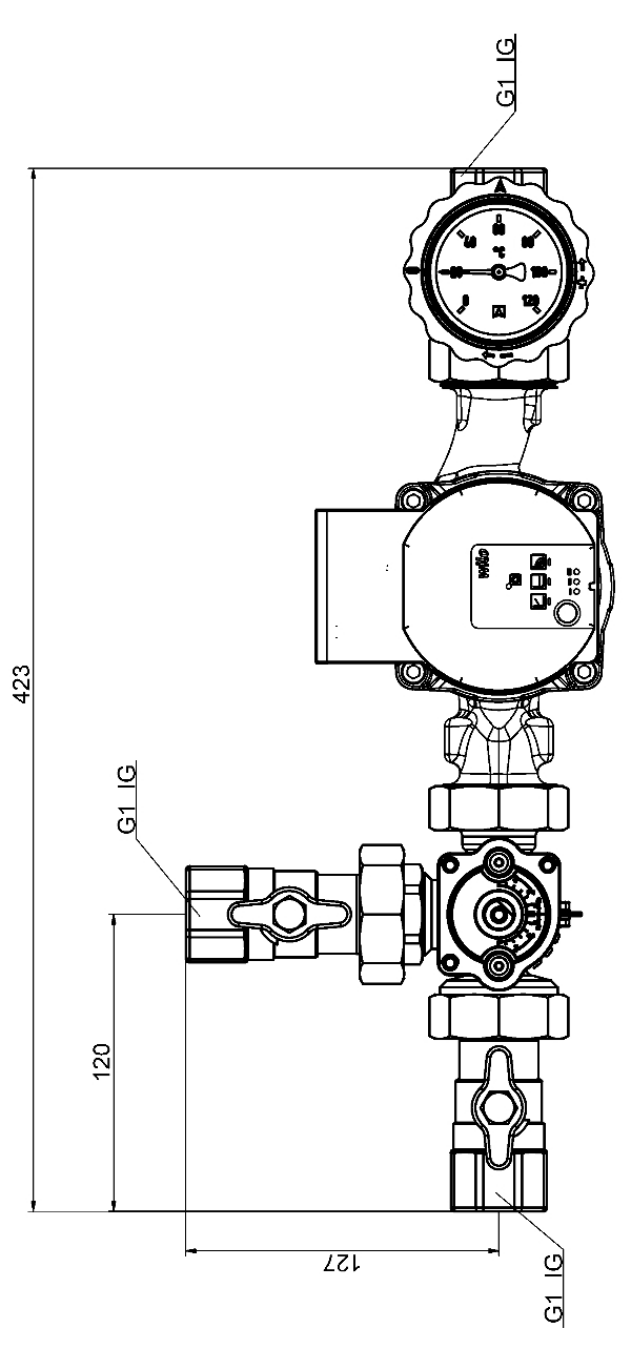

Dimensions (mm)

Versions

	Pump		Part no.
charging unit RTA 60 DN25 WP	Wilo Para 25-180/6-43	●	77057

● in-stock items

● Non-stock items