bimetal standard thermometer

benefits

- ranges:-20/+60, 0/60, 0/120, 0/160 °C
- brass thermowell
- stem brass or aluminium

Application

Heating, plumbing

Technical Specifications

Nominal size
80

measuring element
Bimetal helix

accuracy class
2 (EN 13190)

ranges °C
0/60

application area
Full scale value

Operating pressure at thermowell
max. 6 bar

Connection
Stem: brass or aluminium, ∅ 9 mm
Thermowell: G½B, brass or aluminium, ∅ 9 mm
Thermowell: (removable (with locking screw for 160 °C and higher))

mounting position
centre back

Dial
Up to 120 °C: Plastic, white
≥ 160 °C: Aluminium, white
Scaling: black

Pointer
Plastic, black

Housing
Sheet steel, galvanised

push on bezel
Sheet steel, nickel-plated

window
Plastic

Options

- other ranges

- Nominal size 34, 160

Technical Drawings

Centre back connection

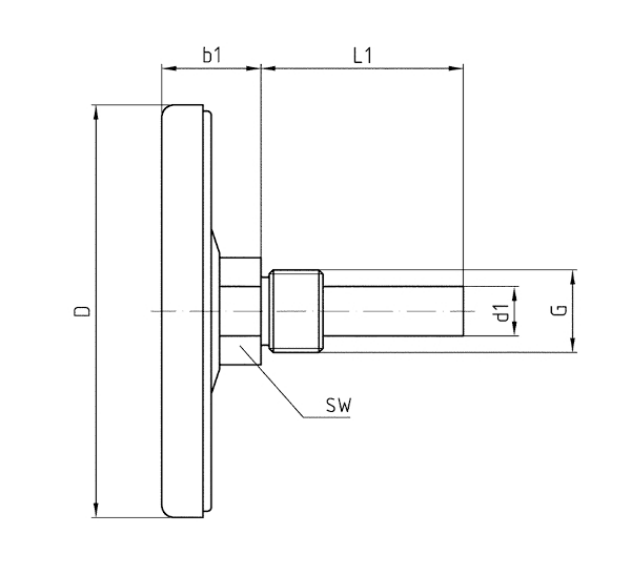

Dimensions (mm)

NG	b1	D	d1	G	L1	SW
50	18	50	12	G½B	40	19/22
50	18	50	12	G½B	63	19/22
50	18	50	12	G½B	100	19/22
50	18	50	12	G½B	150	19/22
63	20	63	12	G½B	40	19/22
63	20	63	12	G½B	63	19/22
63	20	63	12	G½B	100	19/22
63	20	63	12	G½B	150	19/22
80	21	80	12	G½B	40	19/22
80	21	80	12	G½B	63	19/22
80	21	80	12	G½B	100	19/22
80	21	80	12	G½B	150	19/22
80	21	80	12	G½B	200	19/22
100	23,7	100	12	G½B	40	19/22
100	23,7	100	12	G½B	63	19/22
100	23,7	100	12	G½B	100	19/22
100	23,7	100	12	G½B	150	19/22
100	23,7	100	12	G½B	200	19/22
160	22	160	12	G½B	40	19/22
160	22	160	12	G½B	63	19/22
160	22	160	12	G½B	100	19/22
160	22	160	12	G½B	150	19/22

Versions

housing ⌀	mounting position	Range	Stem length	Type		Part no.
80 mm	centre back	0/60 °C	40 mm	BiTh 80 ST	●	63865
80 mm	centre back	0/60 °C	63 mm	BiTh 80 ST	●	63866
80 mm	centre back	0/60 °C	100 mm	BiTh 80 ST	●	63867
80 mm	centre back	0/60 °C	150 mm	BiTh 80 ST	●	63868

● in-stock items

● Non-stock items