# bimetal standard thermometer BiTh 50 ST

**Part no. 64034B**

**bimetal standard thermometer**

**benefits**

- ranges:-20/+60, 0/60, 0/120, 0/160 °C
- brass thermowell
- stem brass or aluminium

## Application

Heating, plumbing

## Technical Specifications

**Nominal size**
50

**measuring element**
Bimetal helix

**accuracy class**
2 (EN 13190)

**ranges °C**
0/120

**application area**
Full scale value

**Operating pressure at thermowell**
max. 6 bar

### standard version

**Connection**
Stem: brass or aluminium, ∅ 9 mm
Thermowell: G½B, brass or aluminium, ∅ 9 mm

**mounting position**
centre back

**Dial**
Up to 120 °C: Plastic, white
≥ 160 °C: Aluminium, white
Scaling: black

**Pointer**
Plastic, black

**Housing**
Sheet steel, galvanised

**push on bezel**
Sheet steel, nickel-plated

**window**
Plastic

## Options

- other ranges

- Nominal size 34, 160

## Technical Drawings

**Centre back connection**

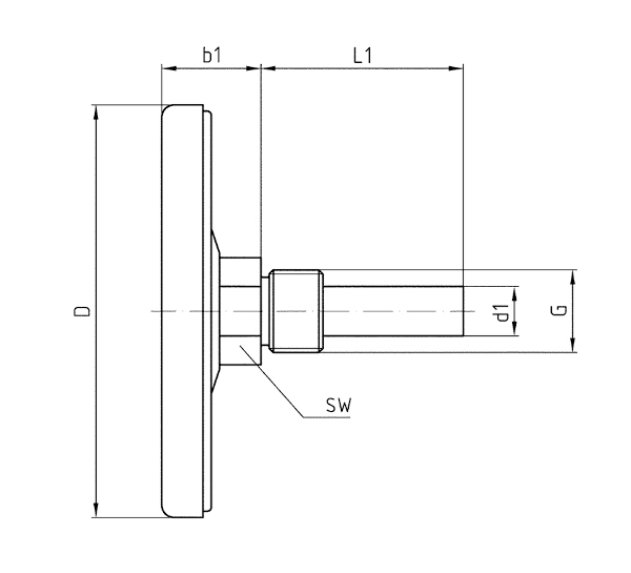


**Dimensions (mm)**

| NG | b1 | D | d1 | G | L1 | SW |
|---|---|---|---|---|---|---|
| 50 | 18 | 50 | 12 | G½B | 40 | 19/22 |
| 50 | 18 | 50 | 12 | G½B | 63 | 19/22 |
| 50 | 18 | 50 | 12 | G½B | 100 | 19/22 |
| 50 | 18 | 50 | 12 | G½B | 150 | 19/22 |
| 63 | 20 | 63 | 12 | G½B | 40 | 19/22 |
| 63 | 20 | 63 | 12 | G½B | 63 | 19/22 |
| 63 | 20 | 63 | 12 | G½B | 100 | 19/22 |
| 63 | 20 | 63 | 12 | G½B | 150 | 19/22 |
| 80 | 21 | 80 | 12 | G½B | 40 | 19/22 |
| 80 | 21 | 80 | 12 | G½B | 63 | 19/22 |
| 80 | 21 | 80 | 12 | G½B | 100 | 19/22 |
| 80 | 21 | 80 | 12 | G½B | 150 | 19/22 |
| 80 | 21 | 80 | 12 | G½B | 200 | 19/22 |
| 100 | 23,7 | 100 | 12 | G½B | 40 | 19/22 |
| 100 | 23,7 | 100 | 12 | G½B | 63 | 19/22 |
| 100 | 23,7 | 100 | 12 | G½B | 100 | 19/22 |
| 100 | 23,7 | 100 | 12 | G½B | 150 | 19/22 |
| 100 | 23,7 | 100 | 12 | G½B | 200 | 19/22 |
| 160 | 22 | 160 | 12 | G½B | 40 | 19/22 |
| 160 | 22 | 160 | 12 | G½B | 63 | 19/22 |
| 160 | 22 | 160 | 12 | G½B | 100 | 19/22 |
| 160 | 22 | 160 | 12 | G½B | 150 | 19/22 |

## Versions

| housing ⌀ | mounting position | Range | Stem length | Type | | Part no. |
|---|---|---|---|---|---|---|
| 50 mm | centre back | 0/120 °C | 150 mm | BiTh 50 ST | ● | 64034B |

● in-stock items

● Non-stock items