3-way mixing valve ARV 382 Vario

Part no. 1338220

3-way mixing valves ARV Vario

benefits

- for distribution and mixing
- 3-way mixing valve with adjustable flow coefficient Kvs
- low torque for increased service life of actuator
- ProClick adapter system for motor mounting without tools

NEW

Application

Universal mixing application in water-based heating and cooling systems (radiators, surface heating systems), also suitable as distribution or zone manifold. Suitable for water and water/glycol mixtures with up to 50 % glycol. Not suitable for drinking water.

Description

Compact, low-loss 3-way mixing valves with brass base and easy-to-handle rotary knob made of high-strength plastic. The rotary knob with scale allows for easy and accurate manual adjustment of the mixing valve. The elevated mark allows for fast position determination. Two scales with "0 to 10" for horizontal installation and "10 to 0" for vertical installation are included for maximum flexibility.
3-way mixing valve for distribution and mixing. The precise mixing ratio of hot boiler water and cold water from the return line ensures the desired flow temperature.
The mixing valves are easy to automate with the AFRISO actuators. The new AFRISO ProClick adapter system allows for hassle-free mounting of the motor to the mixing valve without tools – snap on and done. The low torque ensures a low load and a long service life.

Technical Specifications

Angle of rotation
90 °

Operating temperature range
Medium: 5/95 °C

Nominal pressure
max. 10 bar

Differential pressure
max. 1 bar

Flow rate
3.5/9 m³/h

Leak rate (Δp = 100 kPa)
DN 20 – DN 25
< 0.2 % Kvs

Material
Housing: brass (CW617N)
O rings: EPDM

Technical Drawings

3-way mixing valve DN 20

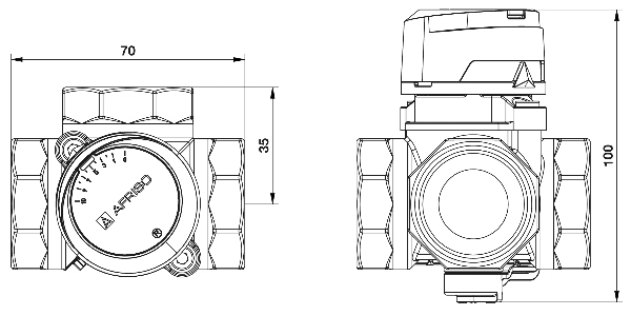

Dimensions (mm)

Versions

	Nominal diameter	Connection	Flow coefficient Kvs		Part no.
3-way mixing valve ARV 382 Vario	DN 20	Rp¾	3.5/9 m³/h	●	1338220

● in-stock items

○ Non-stock items